ASSOCIATED MATERIALS
INCORPORATED
3773 STATE ROAD
CUYAHOGA FALLS, OH 44223

L. F. SCHMIDT LICENSE No. 43409 STATE OF FLORIDA PROFESSIONAL ENGINEER

Digitally signed by Lyndon F Schmidt
Date: 2026.09.01 14:10:59 -04'00'

This item has been digitally signed and sealed by **L. F. Schmidt, P.E.** on the date adjacent to the seal.

Printed copies of this document are not considered signed and sealed and the signature must be verified on any electronic copies.

THIS PRODUCT APPROVAL IS VALID ONLY FOR THE STATE OF FLORIDA

GENTEK SERIES QUAD 4 (Q4)

ALUMINUM "FLAT V GROOVE" SOFFIT

GENERAL NOTES

1. This product has been evaluated and is in compliance with the 9th Edition (2026) Florida Building Code excluding the "High Velocity Hurricane Zone" (HVHZ).
2. Product anchors shall be as listed and spaced as shown on details. Anchor embedment to base material shall be beyond wall dressing or stucco.
3. Site conditions not covered by this drawing are subject to further engineering analysis.
4. Wood/CMU wall construction, by others, must be designed properly to receive loads from the soffit and/or 2" x 2" batten strips.
5. Aluminum soffits shall conform to the specification and labelling requirements of FBC Section 1709.10.

TABLE OF CONTENTS

SHEET #	DESCRIPTION
1	Typical elevations & general notes
2	Panel details & bill of materials
3	Soffit details & design pressures (12" Span)
4	Soffit details & design pressures (16" Span)
5	Soffit details & design pressures (24" Span)

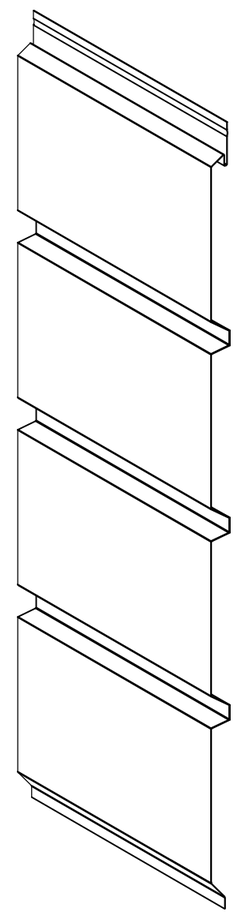

SOLID

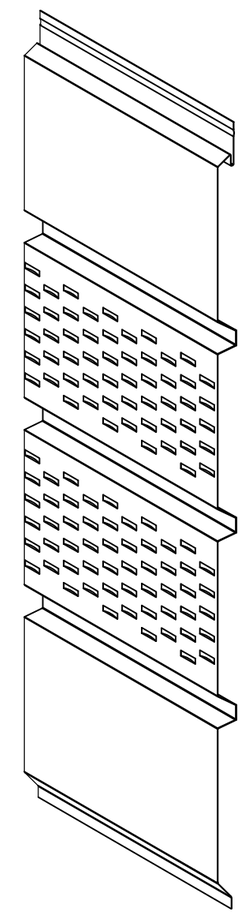

CENTER VENT

QUAD 4 (Q4)
(0.016" THICK)

Documents Prepared By:
Lyndon F. Schmidt
P.E. No. 43409
RW BUILDING CONSULTANTS, INC.
P.O. Box 230, Valrico, FL 33595
Phone No.: 813.659.9197
FBPE Registry No. 9813

PRODUCT: ALUMINUM SOFFIT
PART OR ASSEMBLY: TYPICAL ELEVATIONS & GENERAL NOTES

NO.	DATE	REVISIONS	BY
1	9/01/26	UPDATE TO 9TH ED. (2026) FBC	LFS

DATE: 4/22/24
SCALE: N.T.S.
DWG. BY: LFS
CHK. BY: RW
DRAWING NO.: FL-46697.4
SHEET 1 OF 5

© 2024 R.W. Building Consultants Inc.

Z:\2023 FBC Drawings\Associated Materials, Inc\FL-46697 R2\FL-46697.4.dwg

SOFFIT AIR FLOW TABLE

SOFFIT TYPE	AIR FLOW		
QUAD 4 (Q4)	FREE FLOW AREA (in²/ft²)	FREE FLOW AREA (in²/linear ft)	% FREE FLOW AREA
CENTER VENT PATTERN	**4.94**	**6.57***	**3.42 %**

* FREE FLOW AREA IS PER LINEAR FOOT OF OVERHANG (SPAN "A" ON SHEETS 3, 4 & 5) PER PANEL

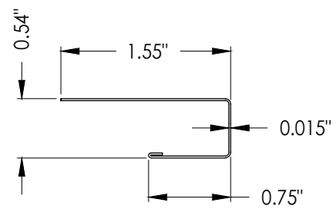

3 **J-CHANNEL**

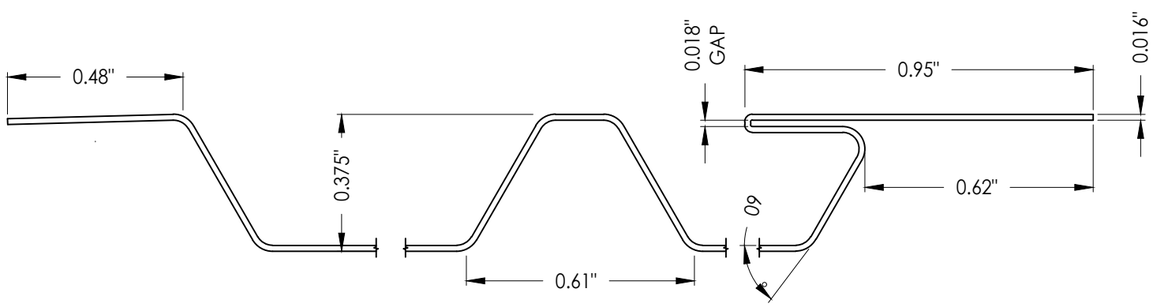

RIB & END DETAILS

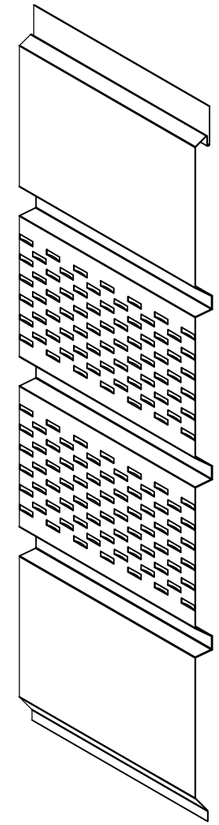

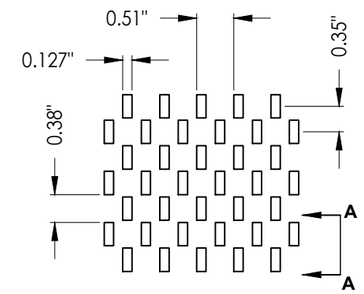

LOUVER PATTERN
(LOUVERS FORMED IN SAME DIRECTION AS RIBS)

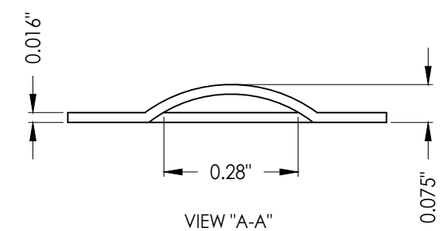

VIEW "A-A"

VENT DETAILS

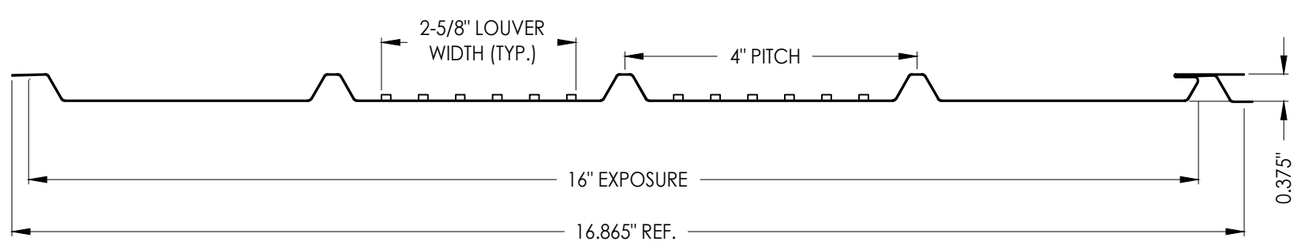

2 **QUAD 4 (Q4) PANEL**

CORROSION RESISTANCE - SALTWATER ENVIRONMENTS
Fasteners & connectors in areas within 3000 ft (914 m) of a saltwater coastline shall comply with FBC Sections 1711.1 or R332.1.

BILL OF MATERIALS

ITEM #	DESCRIPTION	MATERIAL
C	1-1/2" X 1-1/2" NAILING STRIP (G >= 0.42)	WOOD
2	QUAD 4 (Q4) ALUMINUM SOFFIT (AA 3000-H29 SERIES)	ALUM
3	J-CHANNEL ALUMINUM (AA 3000-H29 SERIES)	ALUM
4	1/4" CROWN X 18 GA. STAPLE (7/8" MIN. EMBEDMENT)	STEEL

Documents Prepared By:
Lyndon F. Schmidt
P.E. No. 43409
RW BUILDING CONSULTANTS, INC.
P.O. Box 230, Valrico, FL 33595
Phone No.: 813.659.9197
FBPE Registry No. 9813

PRODUCT: ALUMINUM SOFFIT

PART OR ASSEMBLY: PANEL DETAILS & BILL OF MATERIALS

NO.	DATE	REVISIONS	BY
1	9/01/26	UPDATE TO 9TH ED. (2026) FBC	LFS

DATE: 4/22/24
SCALE: N.T.S.
DWG. BY: LFS
CHK. BY: RW
DRAWING NO.: FL-46697.4
SHEET 2 OF 5

© 2024 R.W. BUILDING CONSULTANTS INC.
Z:\2023 FBC Drawings\Associated Materials, Inc\FL-46697 R2\FL-46697.4.dwg

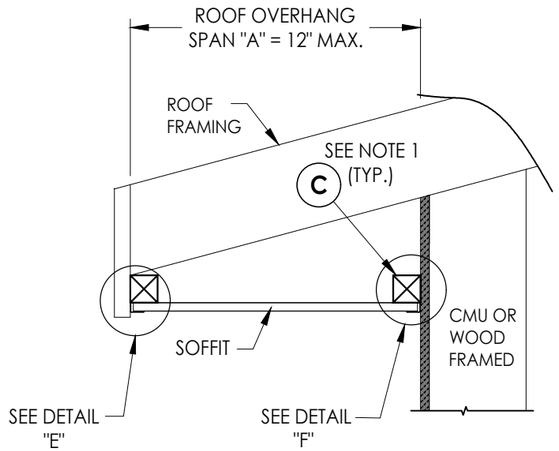

SIDE VIEW - SINGLE SPAN w/ J-CHANNELS

(Shown w/ truss/framing overhang)

QUAD 4 (Q4) SOFFIT 12" MAX. SINGLE SPAN LENGTH	DESIGN PRESSURE (PSF)	
	POSITIVE	NEGATIVE
SOLID SOFFIT	+60	-60
CENTER VENT SOFFIT	+80	-80

REFER TO STAPLE INSTALLATION BELOW

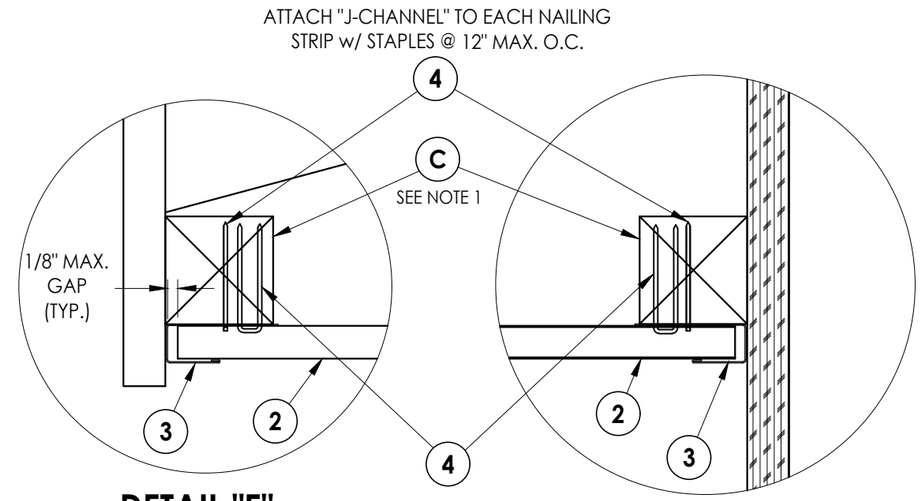

DETAIL "E"

DETAIL "F"

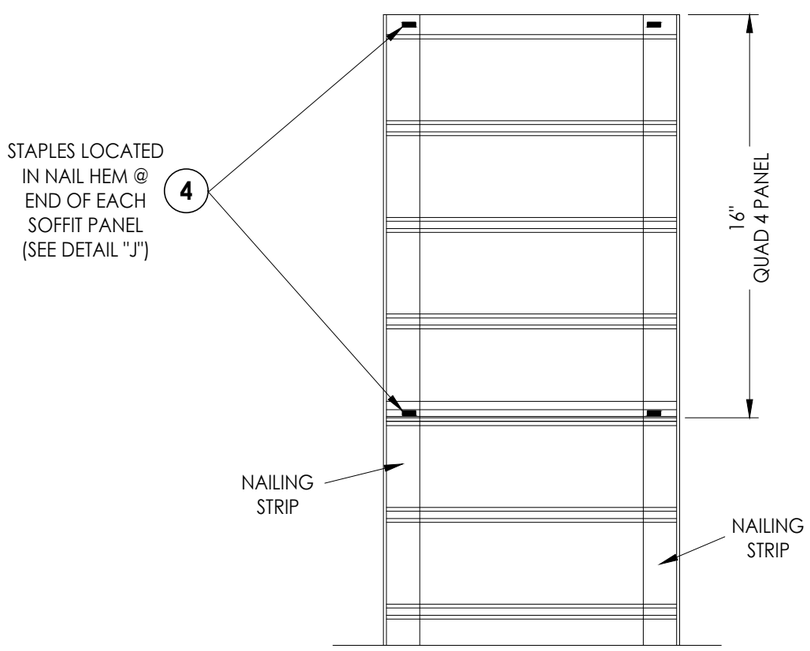

12" MAX. SINGLE SPAN

(J-CHANNEL NOT SHOWN)

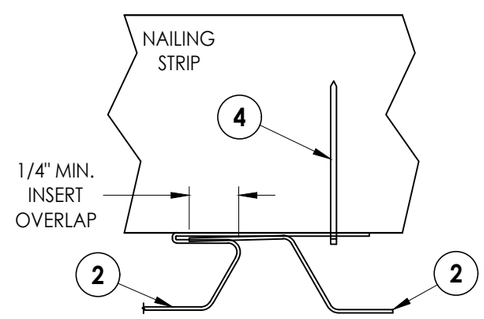

DETAIL "J"

STAPLE @ HEM

NOTES:

1. WOOD FRAMING, NAILING STRIPS AND CONNECTIONS TO BE DESIGNED BY THE ARCHITECT OR ENGINEER OF RECORD.
2. STAPELS (1/4" CROWN X 18 GA.) SHALL BE CORROSION RESISTANT AND PENETRATE A MIN. OF 7/8" INTO SUPPORT FRAMING.

Documents Prepared By:
Lyndon F. Schmidt
P.E. No. 43409
RW BUILDING CONSULTANTS, INC.
P.O. Box 230, Valrico, FL 33595
Phone No.: 813.659.9197
FBPE Registry No. 9813

PRODUCT: VINYL SOFFIT

PART OR ASSEMBLY: SOFFIT DETAILS & DESIGN PRESSURES

REVISIONS

NO.	DATE		BY
1	9/01/26	UPDATE TO 9TH ED. (2026) FBC	LFS

DATE: 4/22/24
SCALE: N.T.S.
DWG. BY: LFS
CHK. BY: RW
DRAWING NO.: FL-46697.4
SHEET 3 OF 5

© 2024 R.W. Building Consultants Inc.

Z:\2023 FBC Drawings\Associated Materials, Inc\FL-46697 R2\FL-46697.4.dwg

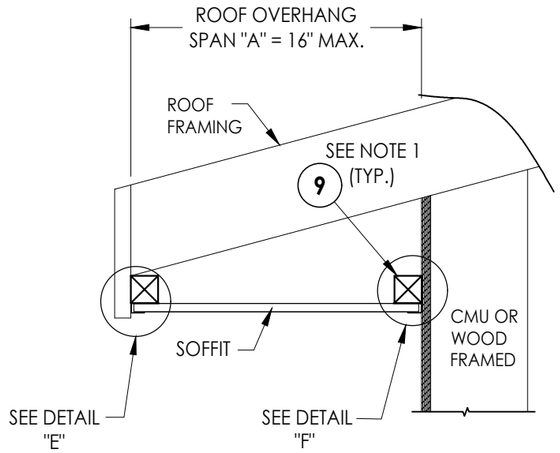

SIDE VIEW - SINGLE SPAN w/ J-CHANNELS

(Shown w/ truss/framing overhang)

QUAD 4 (Q4) SOFFIT 16" MAX. SINGLE SPAN LENGTH	DESIGN PRESSURE (PSF)	
	POSITIVE	NEGATIVE
SOLID SOFFIT	+40	-40
CENTER VENT SOFFIT	+50	-50

REFER TO STAPLE INSTALLATION BELOW

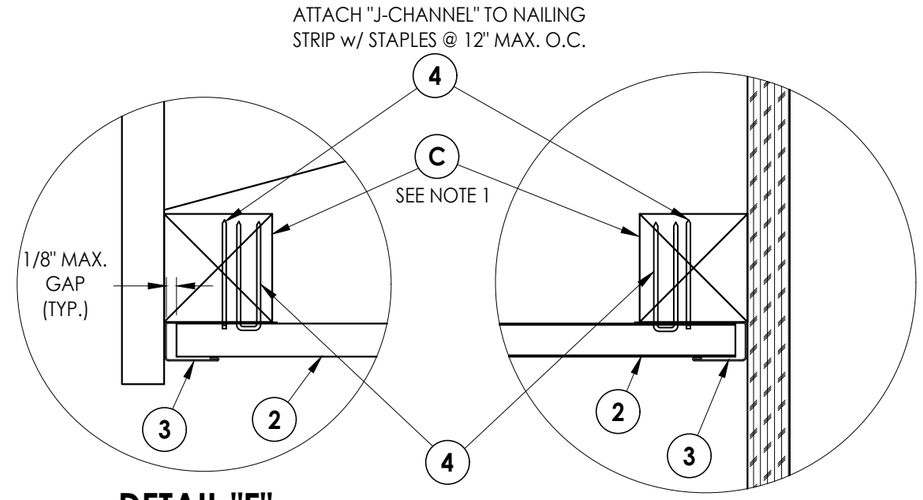

DETAIL "E"

ATTACH SOFFIT TO NAILING STRIPS w/ STAPLES @ HEM PANEL AND ALTERNATING FLAT "V" GROOVES (SEE DETAIL "J" & "K")

DETAIL "F"

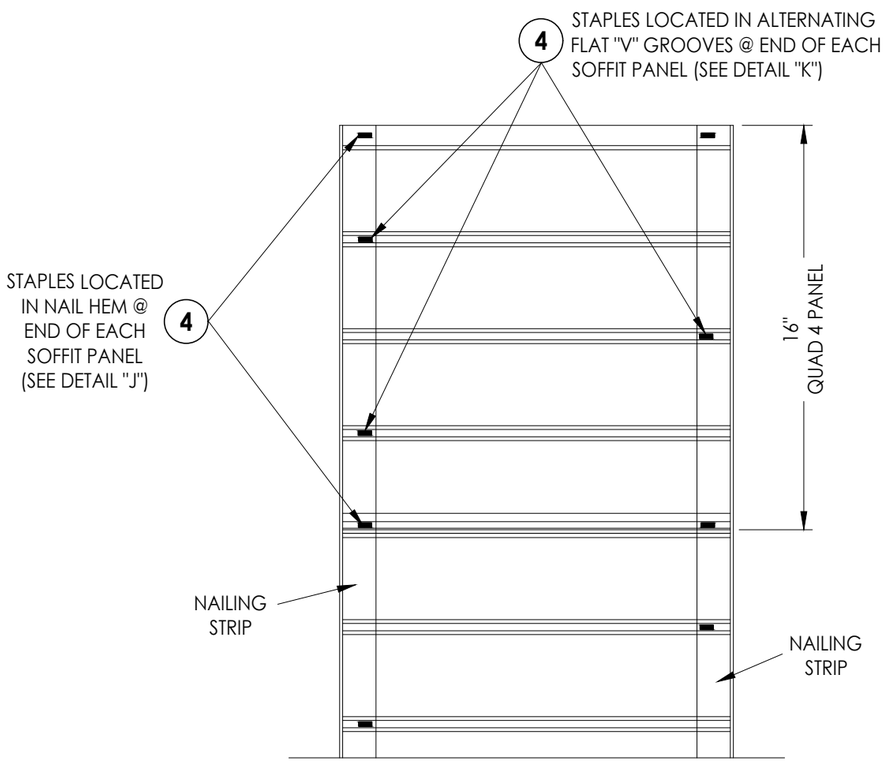

16" MAX. SINGLE SPAN

(J-CHANNEL NOT SHOWN)

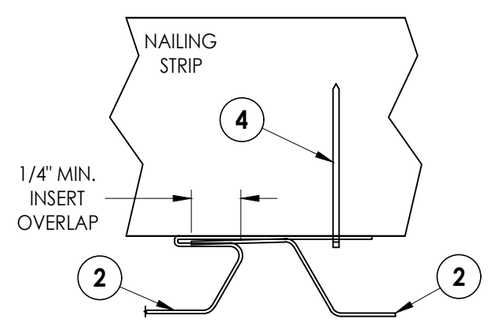

DETAIL "J"

STAPLE @ HEM

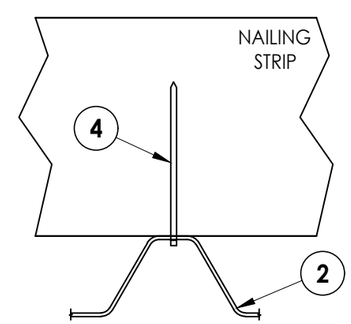

DETAIL "K"

STAPLE @ FLAT "V" GROOVE

NOTES:

1. WOOD FRAMING, NAILING STRIPS AND CONNECTIONS TO BE DESIGNED BY THE ARCHITECT OR ENGINEER OF RECORD.
2. STAPELS (1/4" CROWN X 18 GA.) SHALL BE CORROSION RESISTANT AND PENETRATE A MIN. OF 7/8" INTO SUPPORT FRAMING.

Documents Prepared By:
Lyndon F. Schmidt
P.E. No. 43409
RW BUILDING CONSULTANTS, INC.
P.O. Box 230, Valrico, FL 33595
Phone No.: 813.659.9197
FBPE Registry No. 9813

PRODUCT: VINYL SOFFIT

PART OR ASSEMBLY: SOFFIT DETAILS & DESIGN PRESSURES

REVISIONS

NO.	DATE		BY
1	9/01/26	UPDATE TO 9TH ED. (2026) FBC	LFS

DATE: 4/22/24
SCALE: N.T.S.
DWG. BY: LFS
CHK. BY: RW
DRAWING NO.: FL-46697.4
SHEET 4 OF 5

© 2024 R.W. BUILDING CONSULTANTS INC.

Z:\2023 FBC Drawings\Associated Materials, Inc\FL-46697 R2\FL-46697.4.dwg

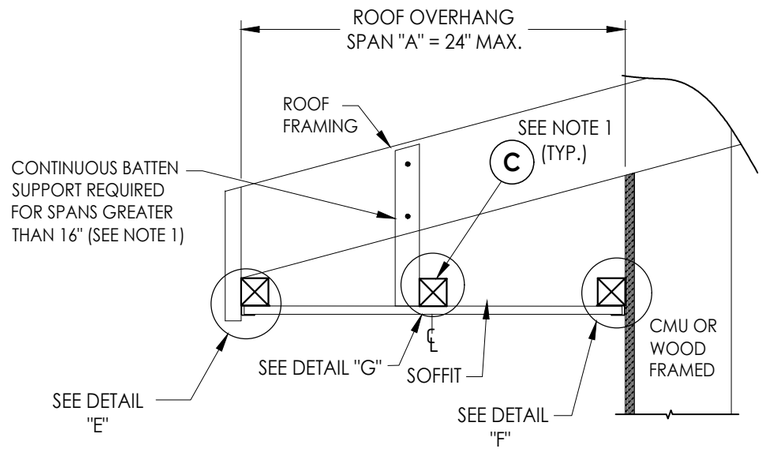

SIDE VIEW - DOUBLE SPAN w/ J-CHANNELS

(Shown w/ truss/framing overhang)

QUAD 4 SOFFIT 24" MAX. DOUBLE SPAN LENGTH	DESIGN PRESSURE (PSF)	
	POSITIVE	NEGATIVE
SOLID SOFFIT	+40	-40
CENTER VENT SOFFIT	+40	-40

REFER TO STAPLE INSTALLATION BELOW

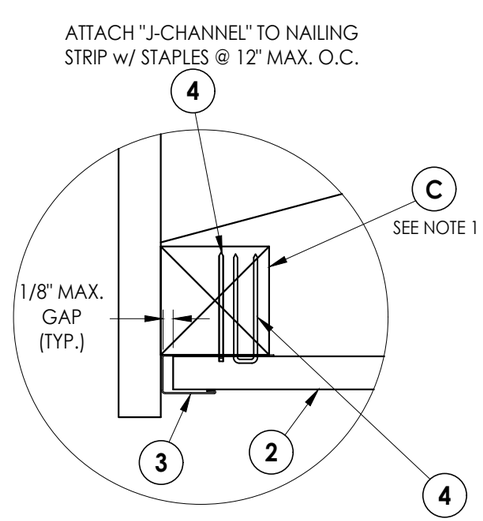

DETAIL "E"

ATTACH SOFFIT TO NAILING STRIPS w/ STAPLES @ HEM PANEL AND ALTERNATING FLAT "V" GROOVES (SEE DETAIL "J" & "K")

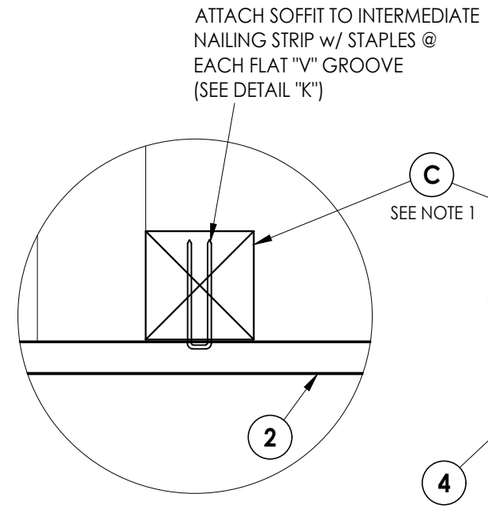

DETAIL "G"

ATTACH SOFFIT TO NAILING STRIPS w/ STAPLES @ HEM PANEL AND ALTERNATING FLAT "V" GROOVES (SEE DETAIL "J" & "K")

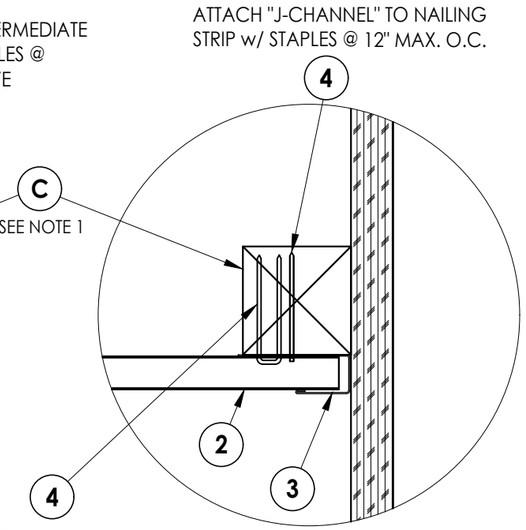

DETAIL "F"

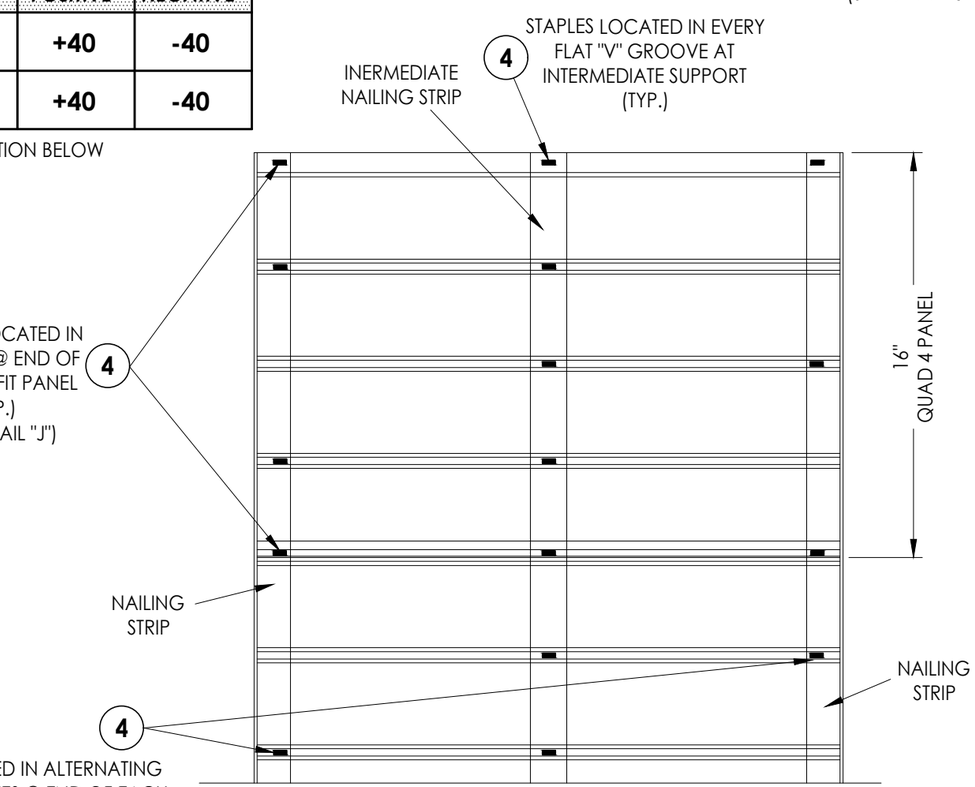

24" MAX. DOUBLE SPAN

(J-CHANNEL NOT SHOWN)

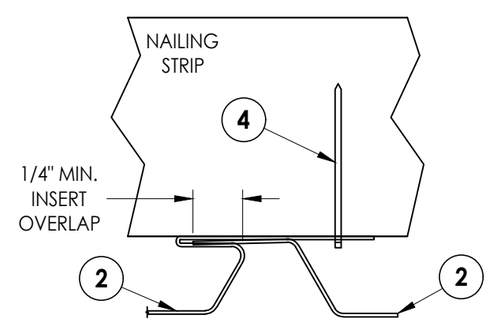

DETAIL "J"

STAPLE @ HEM

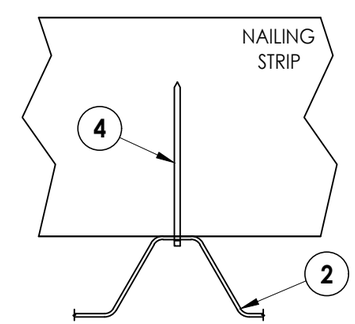

DETAIL "K"

STAPLE @ FLAT "V" GROOVE

NOTES:

1. WOOD FRAMING, NAILING STRIPS AND CONNECTIONS TO BE DESIGNED BY THE ARCHITECT OR ENGINEER OF RECORD.
2. STAPELS (1/4" CROWN X 18 GA.) SHALL BE CORROSION RESISTANT AND PENETRATE A MIN. OF 7/8" INTO SUPPORT FRAMING.

Documents Prepared By:
Lyndon F. Schmidt
P.E. No. 43409
RW BUILDING CONSULTANTS, INC.
P.O. Box 230, Valrico, FL 33595
Phone No.: 813.659.9197
FBPE Registry No. 9813

PRODUCT: VINYL SOFFIT

PART OR ASSEMBLY: SOFFIT DETAILS & DESIGN PRESSURES

NO.	DATE	REVISIONS	BY
1	9/01/26	UPDATE TO 9TH ED. (2026) FBC	LFS

DATE: 4/22/24
SCALE: N.T.S.
DWG. BY: LFS
CHK. BY: RW
DRAWING NO.: FL-46697.4
SHEET 5 OF 5

© 2024 R.W. Building Consultants Inc.

Z:\2023 FBC Drawings\Associated Materials, Inc\FL-46697 R2\FL-46697.4.dwg